Composite Repair User Group Meeting – September 2013

Simon Frost – Walker Technical Resources

ENGINEERED COMPOSITE TECHNOLOGY
INTEGRITY & MAINTENANCE SOLUTIONS

Introduction

Overview on the latest developments in composite repair technology, specifically;

1. ISO standard – latest revision update
2. Quality control during repair application
3. Inspection of composite repairs in service

Major changes - summary

Changes are aimed at making the standard easier to read and apply and tighten up some of the engineering aspects.

1. Scope

   Explanation that standard is not a defect assessment standard. Expectation is that pipeline community will object as within document through wall defects are considered

2. Summary of key issues

   Overview of the key steps in repair application from enquiry stage to inspection in service – where to the sections of the standard fit in relation to the practical situation

3. Design methodology

   Flowchart summarising design process has been added

4. Design temperature effects

   New requirement for glass transition temperature as a function of cure temperature for high criticality lines

Major changes - summary

5. Design equations

   Design equations have been updated to account for Poisson's ratio where appropriate

6. Axial slot type defect

   Warning statement about limitation of design for long slots

7. Repair thickness increase factors

   Equations have been simplified

8. Testing and inspection

   Allowable defect Tables have been updated along with inclusion of photographs to help defect descriptions

Major changes - summary

9. Installer qualification

   Updated to reflect current practice

10. Design overview

    New Annex to describe assumptions made in the design process

11. Operator perspective

    New Annex summarising expectations of end users from regulators in terms of integrity management

QA/QC

Composite repairs are an engineered solution.

Therefore QA/QC is an integral part of the process in the application of composite repairs

Effective QA/QC ensures that;

- The repair is applied in accordance with the method statement
- The appropriate paperwork is completed for any subsequent audit requirements as part of the overall integrity management strategy

QA/QC

QA/QC controls should always be followed as defined in installation method statement. These include;

- Measurement of surface roughness (e.g. Testex tape)
- Measurement of the actual defect size (may need to include filler size, unprepared surface area)
- Environmental conditions (temperature, humidity etc.)
- Repair laminate lay-up (cloth orientation)
- Repair dimensions (number of layers, thickness, axial extent from edge of defect, taper length)
- Assessment of cure (time, hardness)

Integrity management of composite repairs

The following overview is primarily concerned with safety critical pipework

- The repair should be engineered for a specific design lifetime (note terms temporary and permanent are ambiguous)
- The Operator/Owner should set up a composite repair management system (or be included in a temporary repair register). Information stored should include MCDR, QA/QC documentation (close out repair report)
- At the end of repair lifetime, the component replaced or the repair removed or inspected and re-validated for a further defined life

Inspection of repairs

In general there are 3 parts of a composite repair system that require inspection. These are;

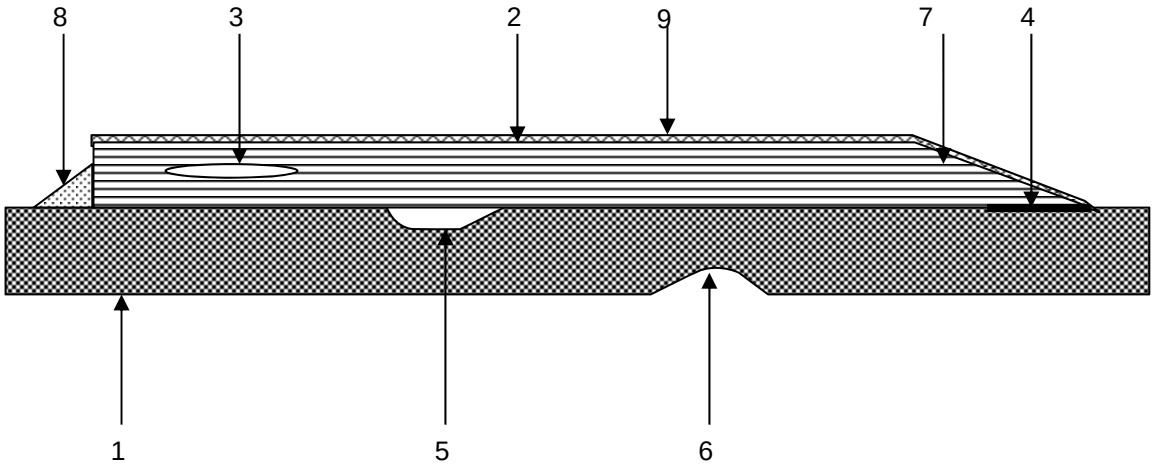

Key
1 - substrate, pipe wall
2 - repair laminate
3 - internal laminate defect
4 - interfacial delamination
5 - external defect (with filler)
6 - internal defect
7 - taper of laminate
8 - adhesive fillet
9 - resin rich surface layer

- Substrate internal/external defects underlying the repair
- Delamination at the interface between the composite repair and the substrate
- Defects within the composite repair

Substrate internal/external defects underlying the repair

- Electromagnetic techniques with a stand off – provides an assessment of the remaining wall thickness e.g. SLOFEC or PEC

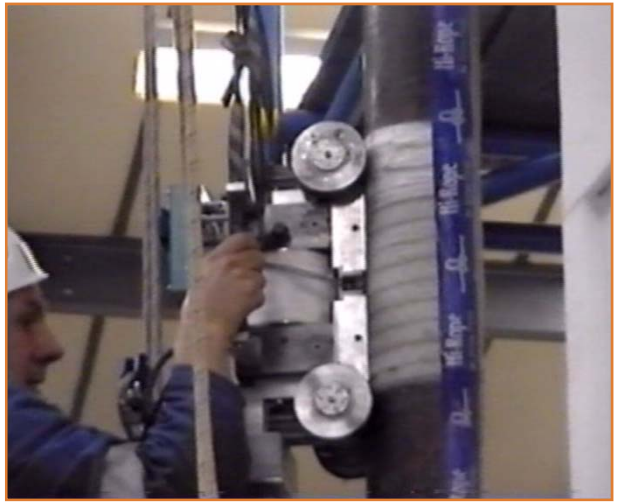

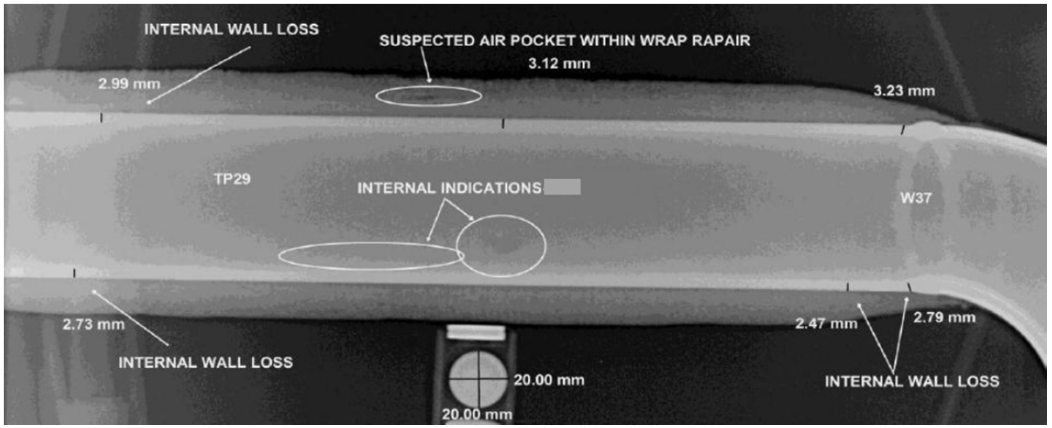

- X-rays (digital or photographic) – assess wall loss and size of through wall defect

Interfacial Delaminations

- No existing commercial inspection techniques available as of yet
- Visual inspection at the edge of repair to check for any signs of initiation of delaminations
- There are inspection development initiatives looking into the issue of interfacial delaminations. The following inspection techniques have been trialled with varying degrees of success;
    - Ultrasonics
    - Microwaves
    - Digital X-rays
    - Mechanical impedance meters (electronic coin tapper)

Defects within the composite laminate

Visual inspection is the common form of inspection for defect types within the composite repair.
The following table below identifies defect types and their allowable limits;

Defect	Allowable limits
Cracks	None that penetrate into the repair laminate
Pits	Max 25mm diameter and 1.5mm in depth
Pin holes	None deeper than resin rich layer
Un-impregnated/dry fibre	None
Wrinkles	No step changes greater than 20% of the repair laminate design thickness
Resin colour	Uniform
Dry spots	None

Inspection Frequency Summary

External corrosion – Visual inspection. If critical then inspection of the pipe substrate on a 2 to 5 year interval