Composite Repairs – Past, Present, and Future

Composite Repair Users Group Quarterly Meeting (Houston, Texas)
Wednesday, December 11, 2013

Presentation by Chris Alexander

Taking on your toughest technical problems

STRESS ENGINEERING SERVICES INC.

an employee-owned company

Today's Presentation

- State of the Art
- Integrity approach – EB-IMP®
- Past uses of composite materials
- PRCI research efforts on composite materials
- Case studies
  - Branch connections
  - High temperature applications
- The future

State of the Art

- Composite materials have been used to repair high pressure transmission pipelines for more than 20 years
- The key to integrating composite technology is properly designing and installing systems that possess adequate service life
- Performance testing has been an essential element in demonstrating the capacity of composite repair technology

The EB-IMP® Process

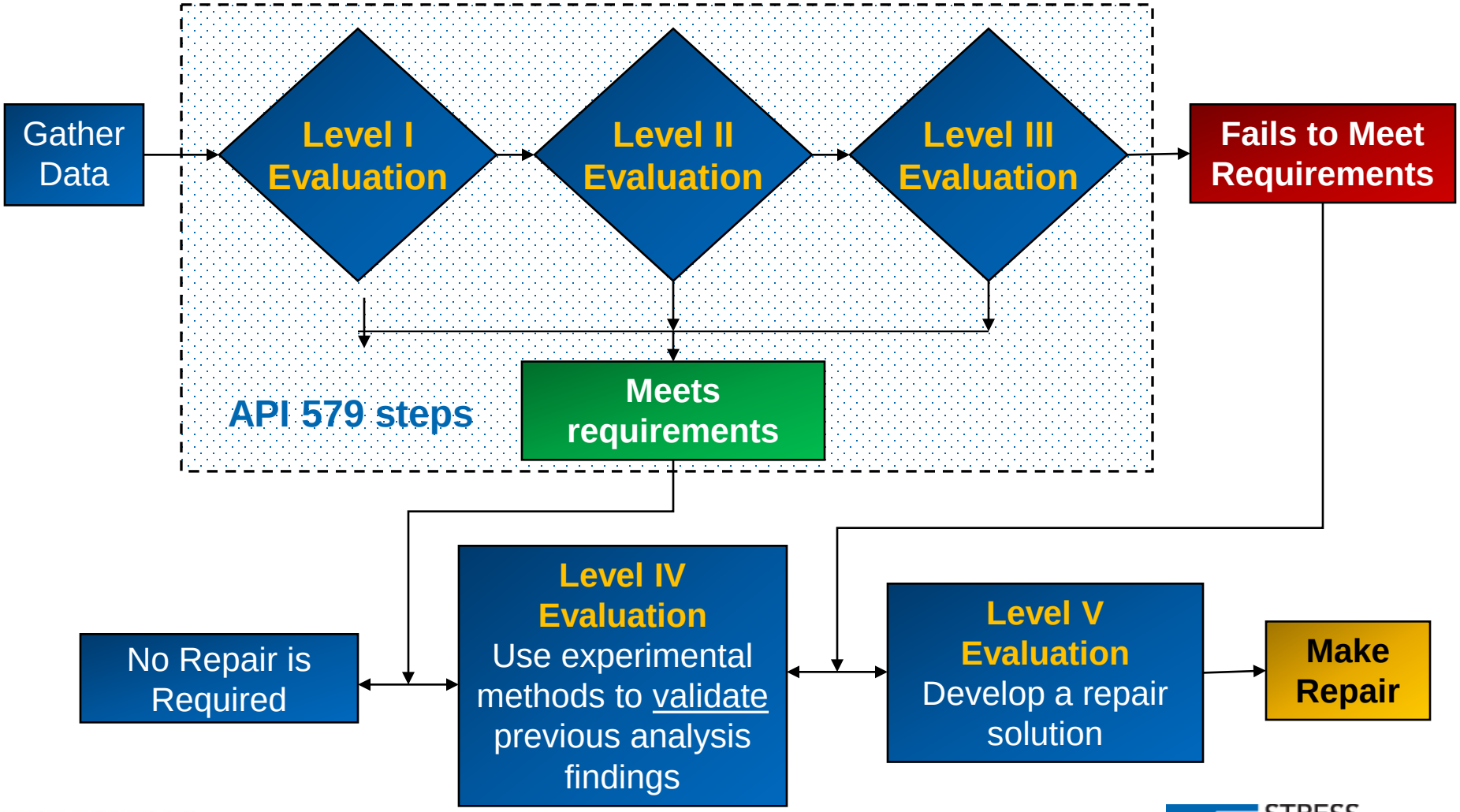

PRCI Research Programs

- MATR-3-4 Long-term performance (10-year)
- MATR-3-5 Repair of dents
- MATR-3-6 Repair of subsea pipelines/risers
- MATR-3-7 Girth weld reinforcement
- MATV-1-2 Wrinkle bend reinforcement
- MATR-3-9 Re-rating to establish MAOP
- NDE 2-3 NDE & Inspection Techniques Applied to Composite Wrap Repairs
- MATR-3-10 Composite Repair Guideline Document (NEW)
- Future programs (potential)
  - Crack repair and reinforcement
  - Elevated temperature testing
  - Effects of pressure during installation

Composite Repair Past Uses

- Corrosion
- Dents (Plain; dents in seam and girth welds)
- Mechanical damage (dents with gouges)
- Tees, elbows, bends, and branch connections
- Girth welds
- Seam weld defects
- Wrinkle bends (cyclic pressure, bending, and tension)
- Cracks
- Pipe spans
- Hydrotest leak repair
- Re-rating to establish MAOP
- Elevated temperatures
- Offshore pipelines and risers

Case Study #1

Branch Connections

Branch Connection Testing (1/4)

- Branch connection test samples prepared using 24-inch x 0.250-inch, Grade X70 (run) and 8.625-inch x 0.322-inch, Grade X52 (branch) pipe materials:
  - Two repaired (1 in-plane and 1 out-of-plane)
  - Two unrepaired (1 in-plane and 1 out-of-plane)
- Internal pressure applied, along with the respective bending loads
- Branch connections loaded until gross plastic deformation observed (in unreinforced samples)

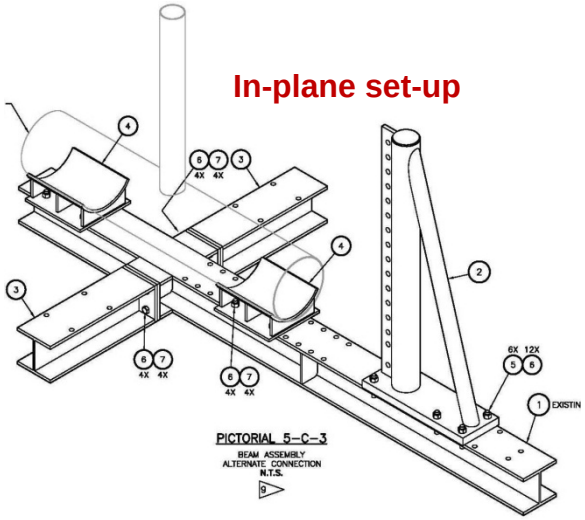

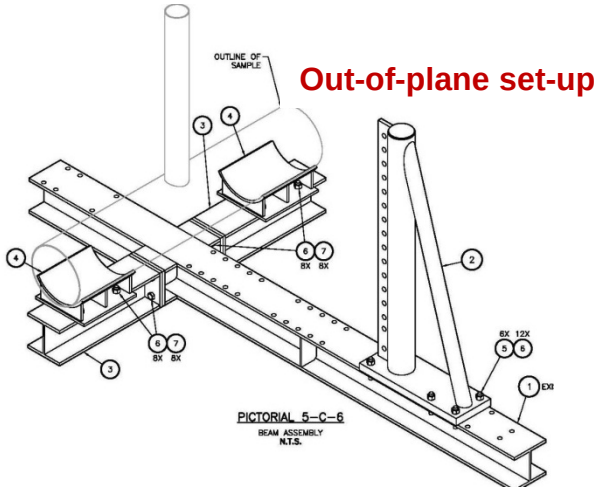

Branch Connection Testing (2/4)

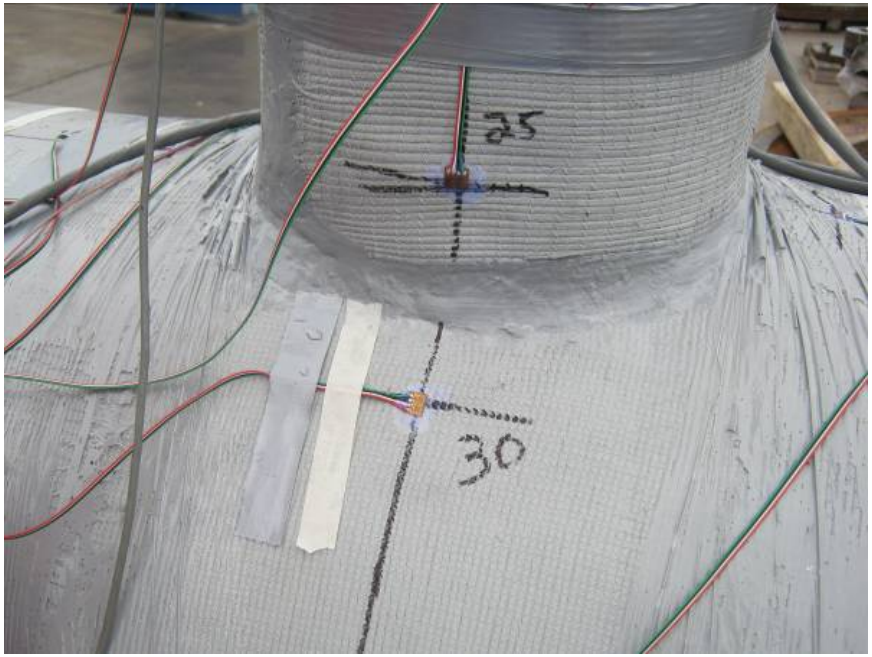

Installation of Armor Plate® Pipe Wrap

Branch Connection Testing (3/4)

Post-test Comparison (In-plane Bending)

Branch Connection Testing (4/4)

Cross-sections cut after testing for in-plane bending sample.

Unreinforced In-plane Sample
(after 13.3 inches at 88.6 kip-ft)

Reinforced In-plane Sample
(after 4.7 inches at 124.0 kip-ft)

In-plane load case: 3.2 times as stiff at 75% M_{yield}

Case Study #2

Performance at Elevated Temperature

Elevated Temperature Design

- Reduction in strength with increasing temperature must be included in the design process
- Not sufficient to just re-rate performance based on industry recommendations (trust, but verify)
- Observed reductions up to 100°C relative to RT range from 15% to 50%
- Validate final design of corrosion repair at temperature with strain gages measurements in corroded region

Coupon Tests up to 100°C (1/2)

Temperature (°C)	Sample	Max Crosshead Disp. [in]	Ultimate Load [lbf]	Ultimate Load/Width [lbf/in]	Ultimate Stress [ksi]
27	A-A1	0.549	16653	16653	229
	A-B1	0.564	14885	14929	207
	A-B2	0.479	14951	15011	201
60	A-D2*	0.342	10788	11933	155
	A-C4	0.444	13850	15320	207
	A-A7	0.548	15081	15644	211
80	A-D1	0.543	14780	14810	192
	A-C6	0.494	12906	15131	194
	A-C7	0.355	11322	13257	172
100	A-C3*	0.378	9363	9633	125
	A-D6	0.577	13396	13656	169
	A-D7	0.464	14125	14125	193
120					

*Indicates Grip Failure

Coupon Tests up to 100°C (2/2)

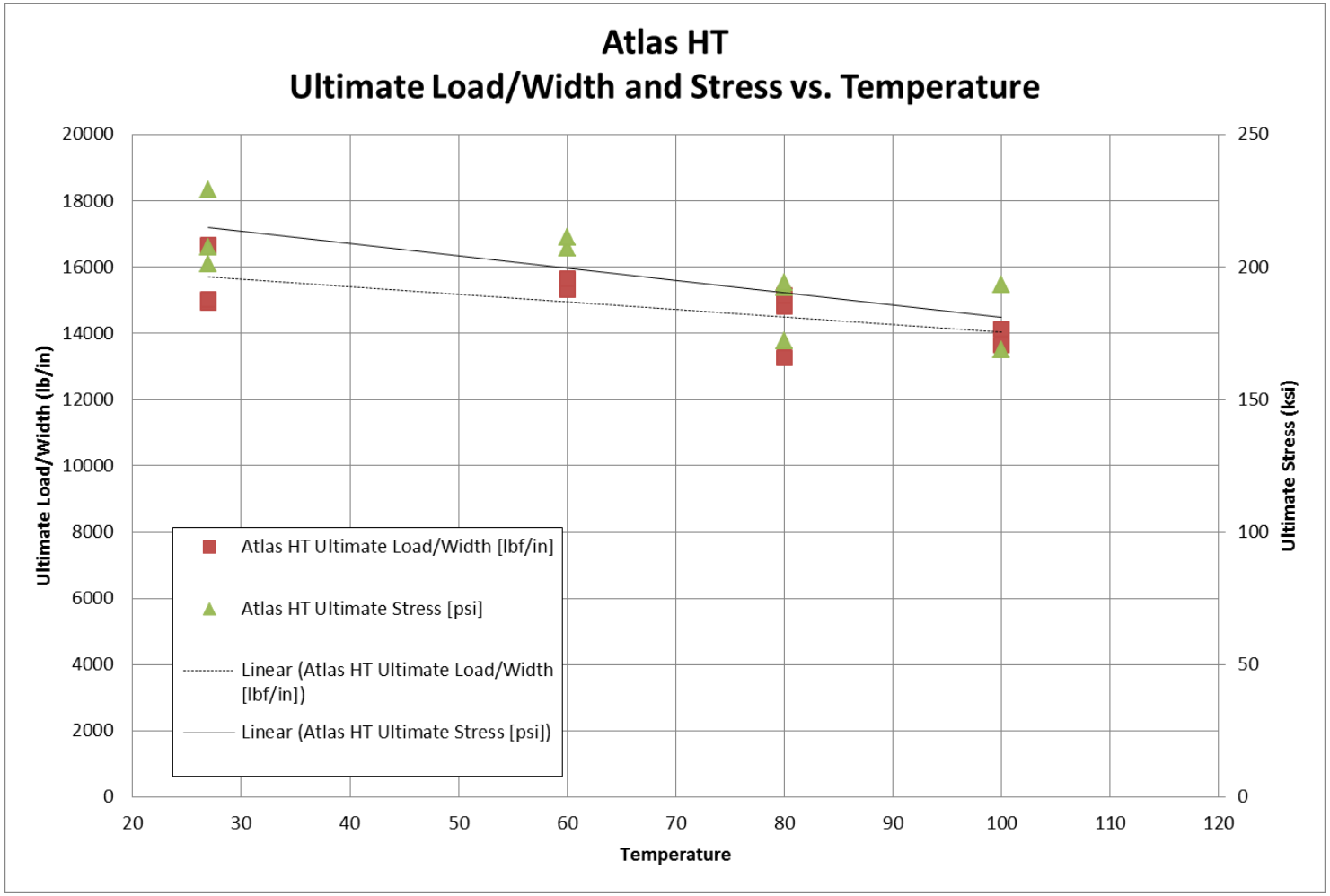

12.75-inch x 0.375-inch, Grade X42 pipe (8-feet long)

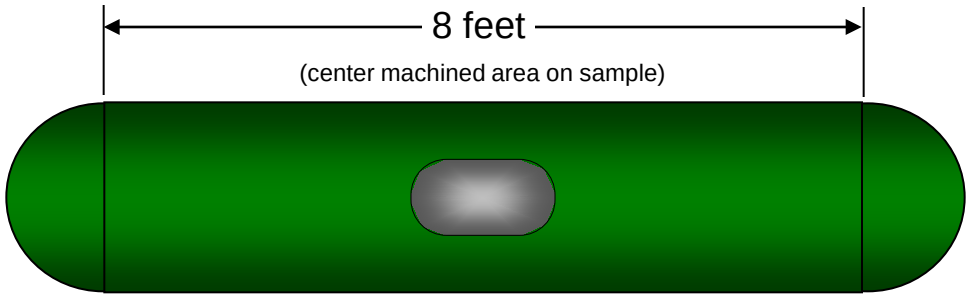

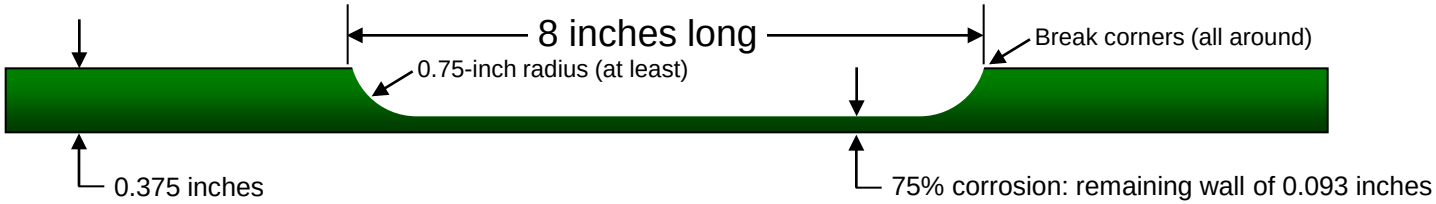

NOTE: Perform all machining 180 degrees from longitudinal ERW seam.

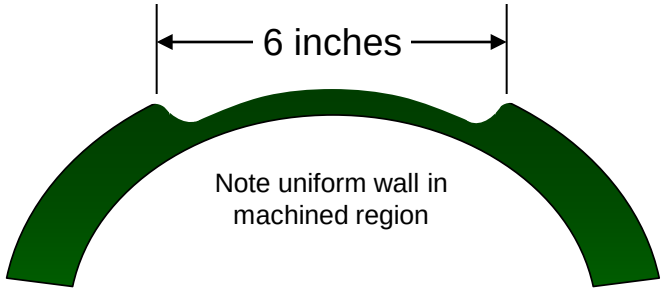

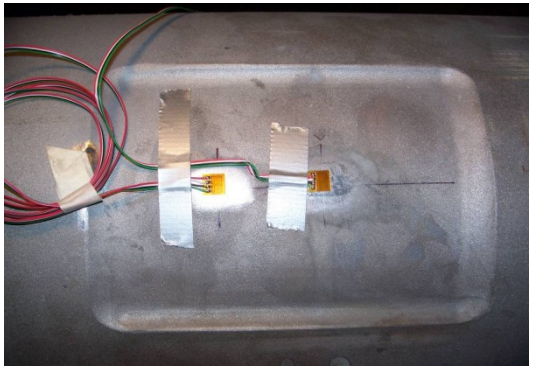

Details on machining

(machined area is 8 inches long by 6 inches wide)

Pressure Test (75% Corrosion)

Measured strains: 0.20% at 72% SMYS and 0.27% at 100% SMYS

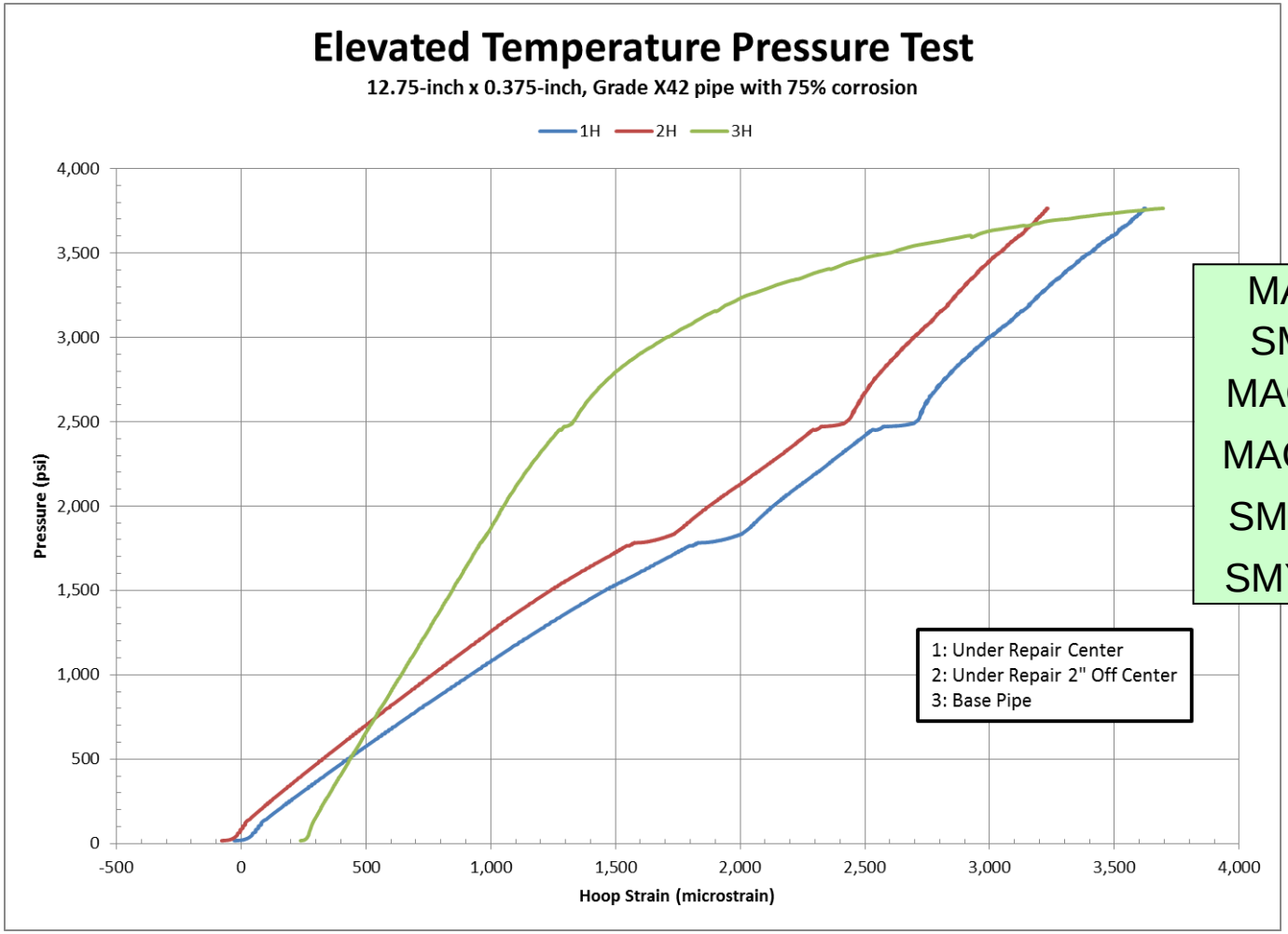

Industry-average data for carbon composites

MAOP	2,524 με
SMYS	3,292 με
$MAOP_{min}$	1,828 με
$MAOP_{max}$	3,087 με
$SMYS_{min}$	2,250 με
$SMYS_{max}$	4,106 με

Closing Comments

The Future

- Standards such as ASME PCC-2 are essential to ensuring that adequate designs exist
- When in doubt, conduct tests (especially when testing new applications) – **FUTURE FOCUS**
- The intent in testing work is to improve confidence in the performance of composite repair systems
- Quality installation work is essential

Questions?

Dr. Chris Alexander, P.E., Principal
chris.alexander@stress.com
(281) 897-6504 (direct)