Composite Reinforcement of Large Diameter Fittings

Richard Kania, TransCanada

September 15, 2016

TransCanada
In business to deliver

Presentation Outline

- Project background
- Approach
- Numerical modeling for composite design optimization
- Comparison with CSA Z662-11 design requirements
- Full-scale testing
- Closing comments

TransCanada

Project Background

- Project was identified that required a solution for reinforcing 3D fittings that may be subjected to thermal expansion and pressure loading.
- The assessment approach involved finite element modeling and full-scale testing.
- The full scale testing effort evaluated a number of composite reinforcement parameters and their effect on pressure capacity of the composite-reinforced 3D fittings.
- The effects of surface finish, cold temperatures, bending, installation pressure, inter layer strain levels, design stress and limit state were elevated.
- Regulatory oversight was a critical part of this work.

Approach

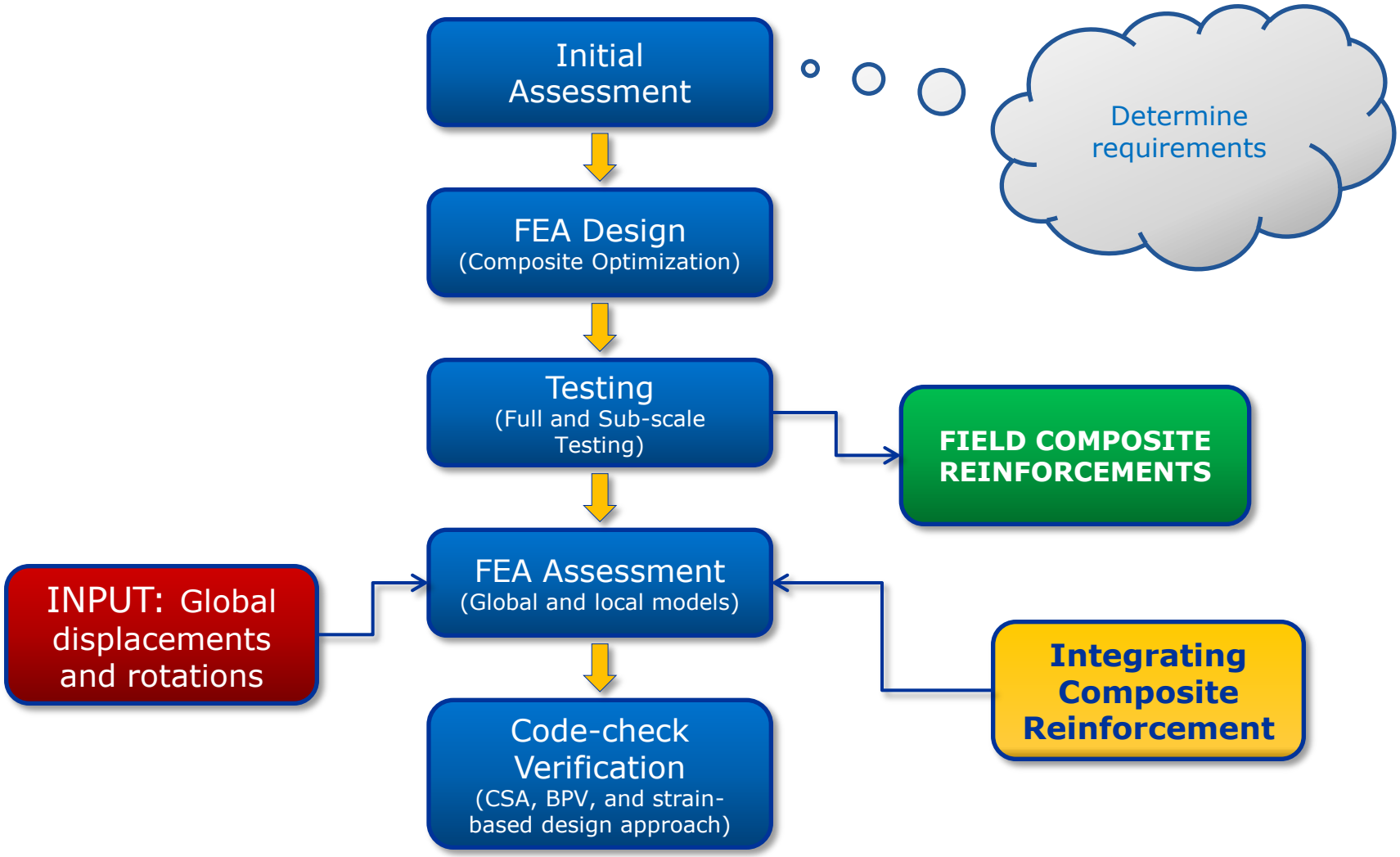

TransCanada

Overall Program

- FEA modeling - Design optimization (initial work)
- Full-scale testing to validate designs
  - Inter-layer strain - measure strain in layers of composite to compare against design stresses
  - Bend and burst testing
    - Bend testing (open and closed modes)
    - Burst strength: reinforced versus unreinforced
- Implementation phase – Reinforce components in the field
- Simultaneously conduct strain based assessment based on limit load analysis techniques.
  - Code check and optimization for actual installations.
  - Define acceptance according to CSA Z662-11 as well as using an alternate approach based on ASME Section VII, Division 2 since composite reinforcement is not defined in any of the pipeline design codes

TransCanada

Finite Element Analysis

Finite Element Modeling

- Finite element analysis (FEA) models were initially constructed to optimize the repair solution:
  - Fiber orientation
  - Composite thickness
- Elastic-plastic models were used to identify pressure level at which yielding occurs in the component material
- Final analysis work (to validate field installations)
  - Developed flexibility factors integrating composites
  - Global analysis using AutoPIPE for unreinforced and reinforced configurations (displacements and rotations).
  - Displacements and associated temperatures and pressure loading were used to conduct a detailed analysis of the fittings.
  - Acquire displacements from global pipe model
  - Calculate elastic stresses in select reinforced components for comparison with CSA Z662-11 allowable stresses

TransCanada

FEA Model Details

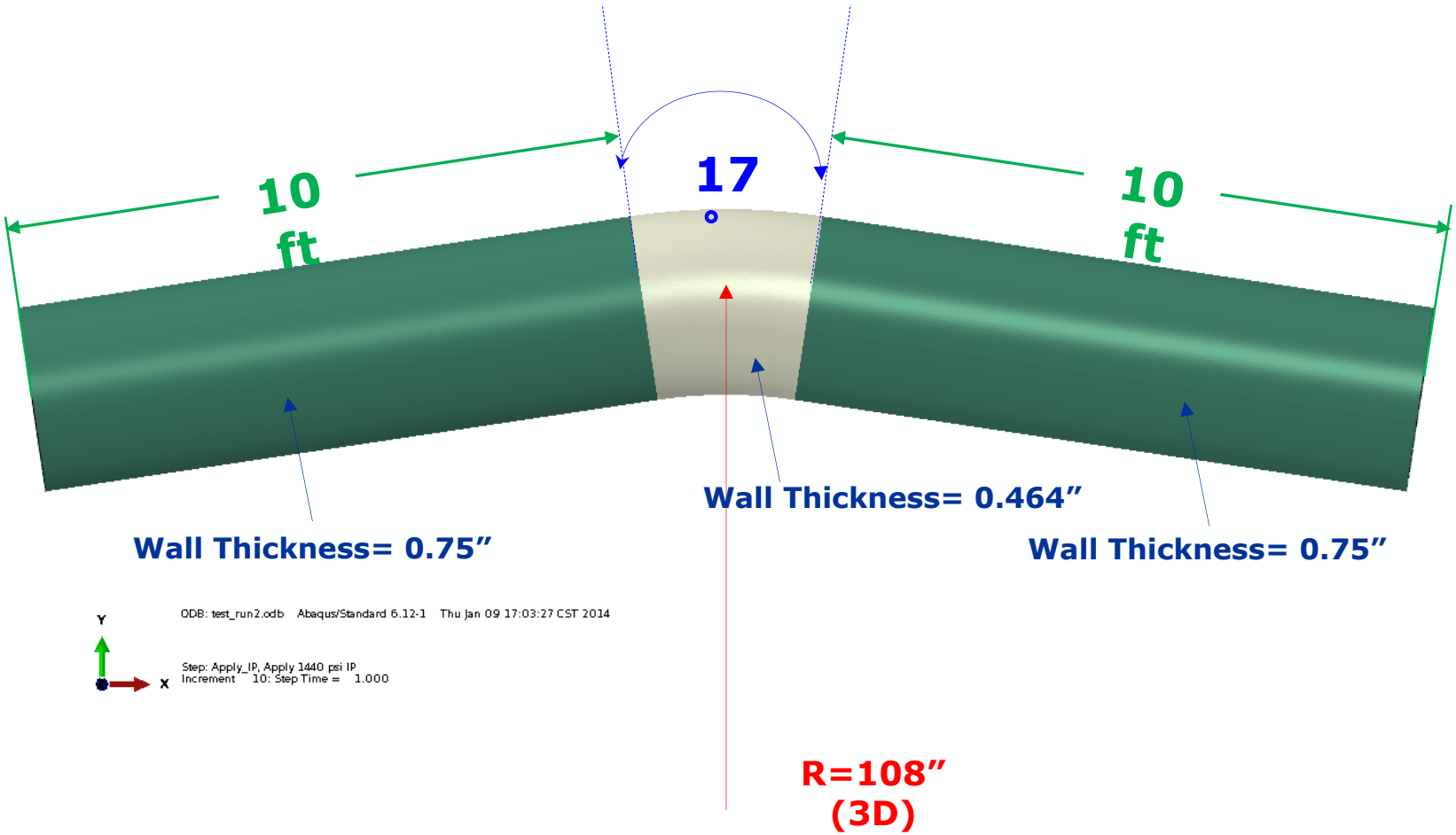

TransCanada

Composite Applied Regions

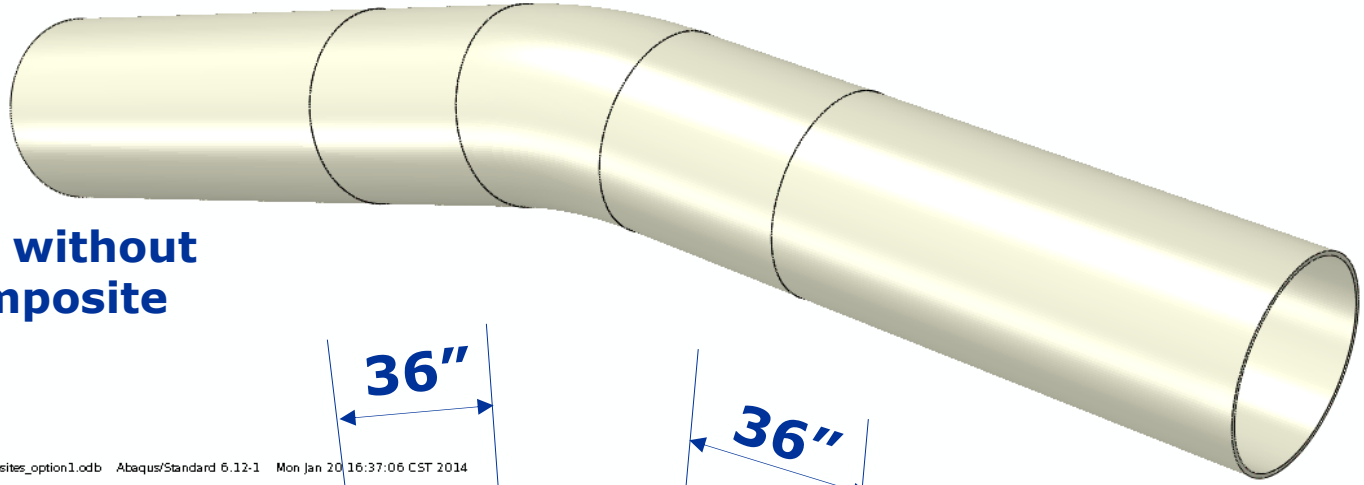

Pipe without composite

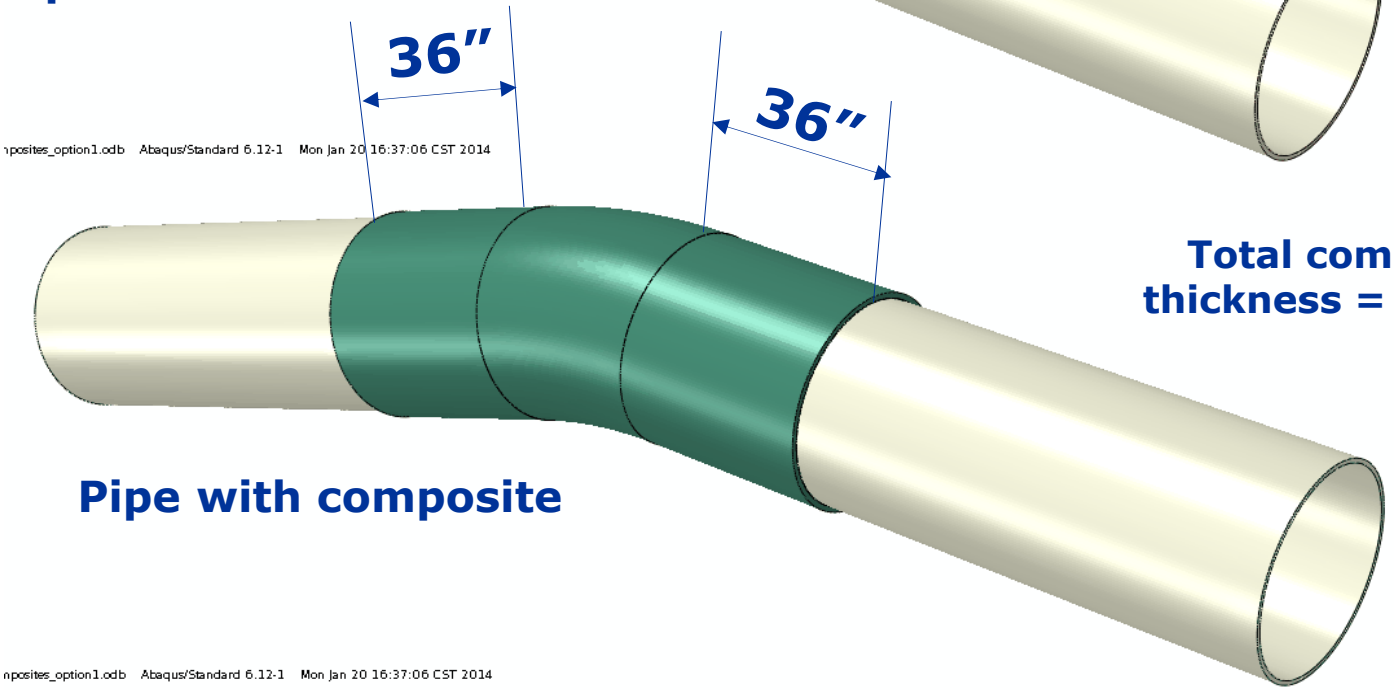

Total composite thickness = 1.0 inch

Pipe with composite

TransCanada

Composite Reinforcement Selection and Configuration

- Armor Plate® Pipe Wrap
  - Thickness of 1.0 inches (16 layers)
  - Elastic modulii of composite material
    - Circumferential (C) 3.93 Msi (27.0 Gpa)
    - Longitudinal (L) 0.65 Msi (4.5 Gpa)
- Reinforcement configurations (16 total layers):
  - Option 1: 3C | 1L | 3C | 1L | 3C | 1L | 3C | 1L
  - **Option 2: 16C (select "optimized" configuration)**
  - Option 3: 16L
  - Option 4: 2C | 2L | 2C | 2L | 2C | 2L | 2C | 2L

TransCanada

Von Mises Stress at Approximate Yield Pressure

Note that UNREINFORCED ELBOW yielded at 1,440 psi

OPTION 1:
Pressure = 2,370 psi (16,340 kPa)

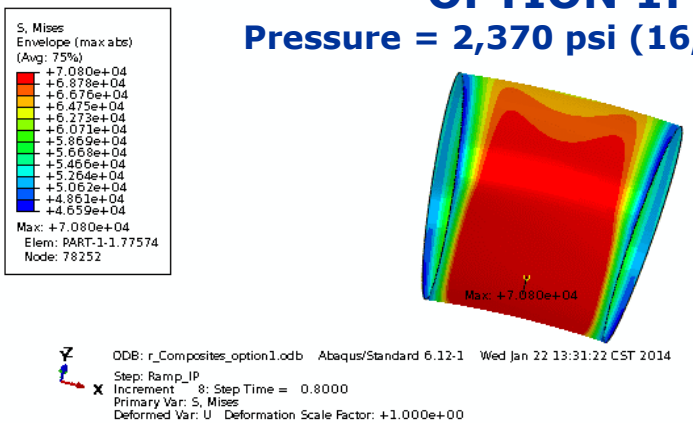

OPTION 2:
Pressure = 2,397 psi (16,526 kPa)

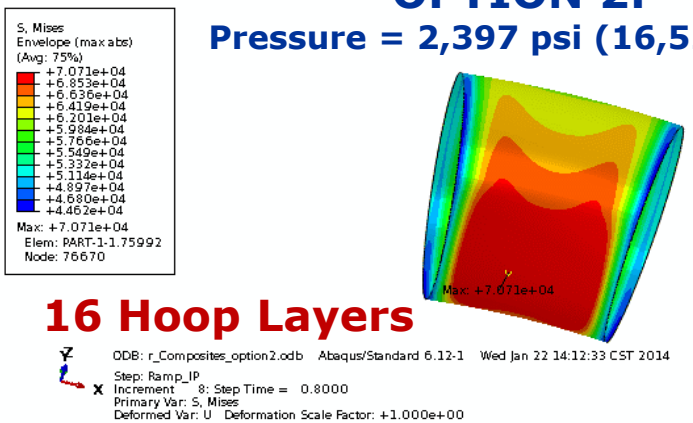

16 Hoop Layers

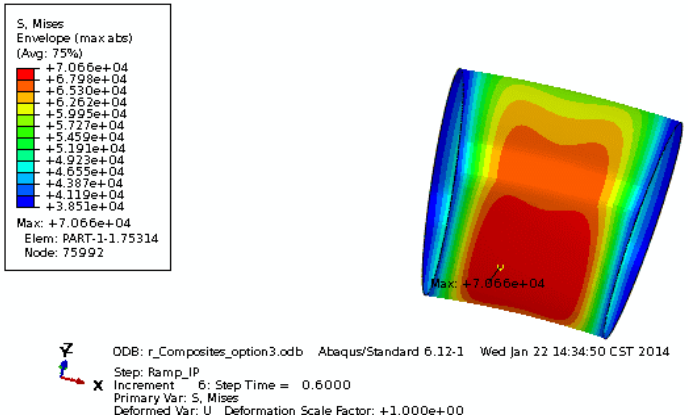

OPTION 3:
Pressure = 1,800 psi (12,410 kPa)

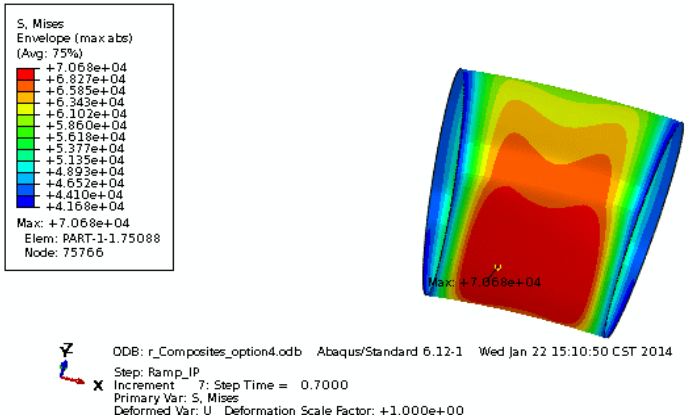

OPTION 4:
Pressure = 2,098 psi (14,465 kPa)

TransCanada

Global and Local Model Interaction

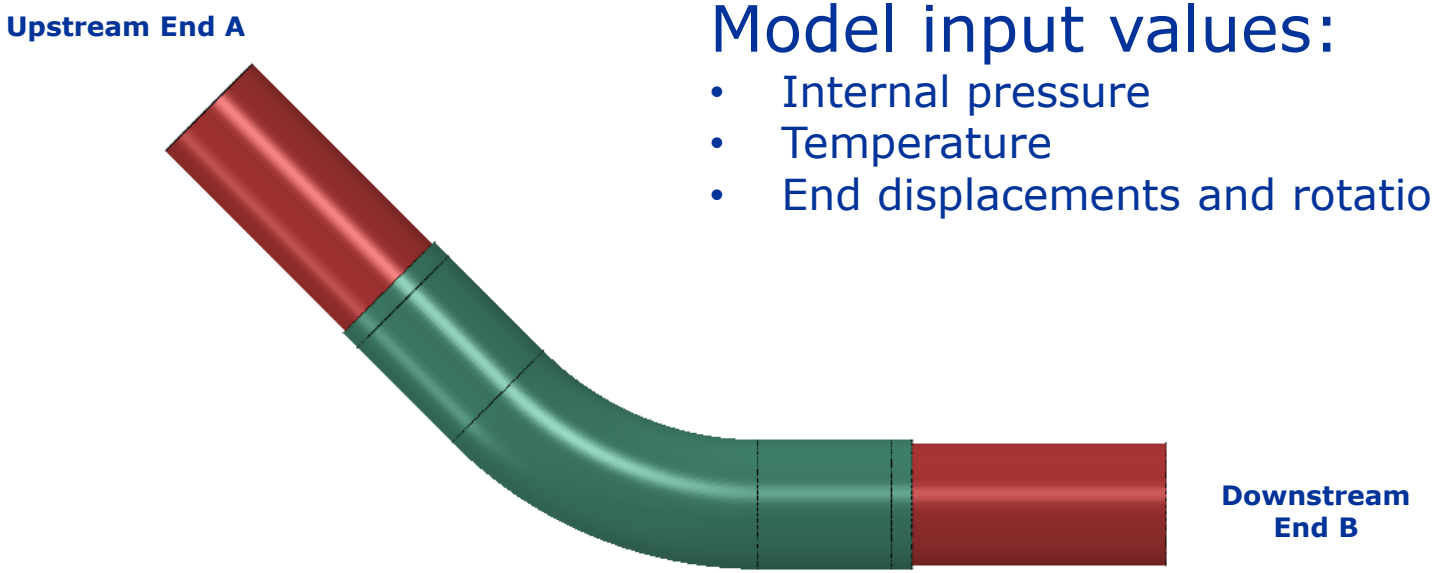

Model input values:

- Internal pressure
- Temperature
- End displacements and rotations

Analysis Process: "Global" to "Local" Finite Element Model

Calculate Flexibility Factors → Displacements & Rotations from Global Models → Calculate stresses using detailed FEA → Compare stresses to CSA Z662 allowable stresses

TransCanada

Stresses in Fittings

Finite element analysis results showed that the composite reinforcements reduced stresses in the fittings to less than CSA Z662-2011 allowable stresses.

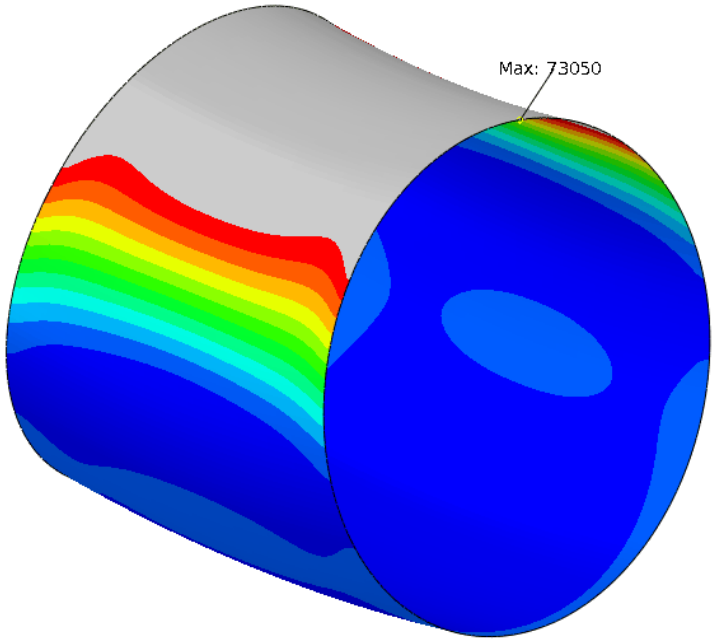

Unreinforced

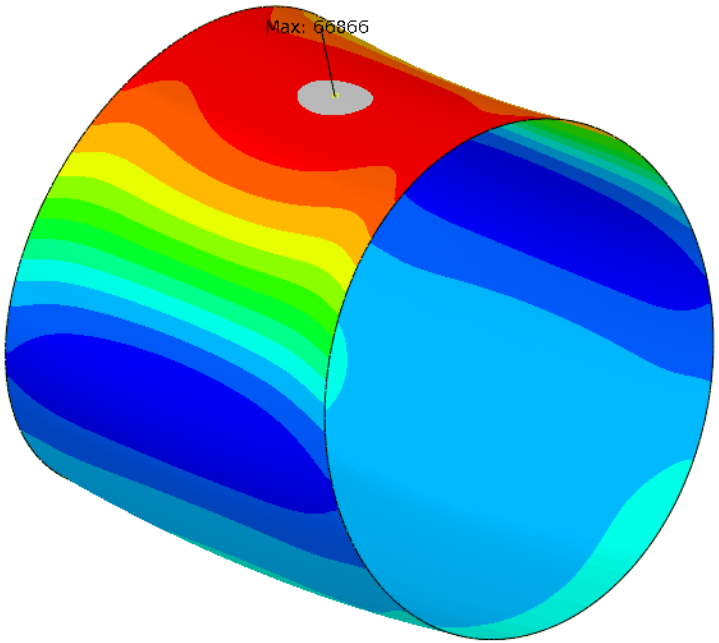

Reinforced

TransCanada

Full-scale Testing Program to Validate FEA predictions

TransCanada

Full Scale Testing at Stress Engineering

- **The testing (12” and 36” samples) effort evaluated:**
  - The effect of surface preparation
  - The effect of cold temperature (coupon testing)
  - The effects of installation pressure
  - Inter-layer strain measurement in layers of composite to compare against design stresses
  - Burst strength: reinforced vs. unreinforced

- **Full-scale elbow testing**
  - Bend testing (open and closed modes)
  - Pressure cycling testing
  - Pressure strength test – 100% SMYS
  - Burst testing : reinforced state

Inter-layer Strain Test (1/4)

36-inch x 0.50-inch, Grade X70 pipe reinforced with 16 layers of APPW
(1.0 inch, same as elbow reinforcement)

TransCanada

Inter-layer Strain Test (2/4)

Inter-layer Strain Test (3/4)

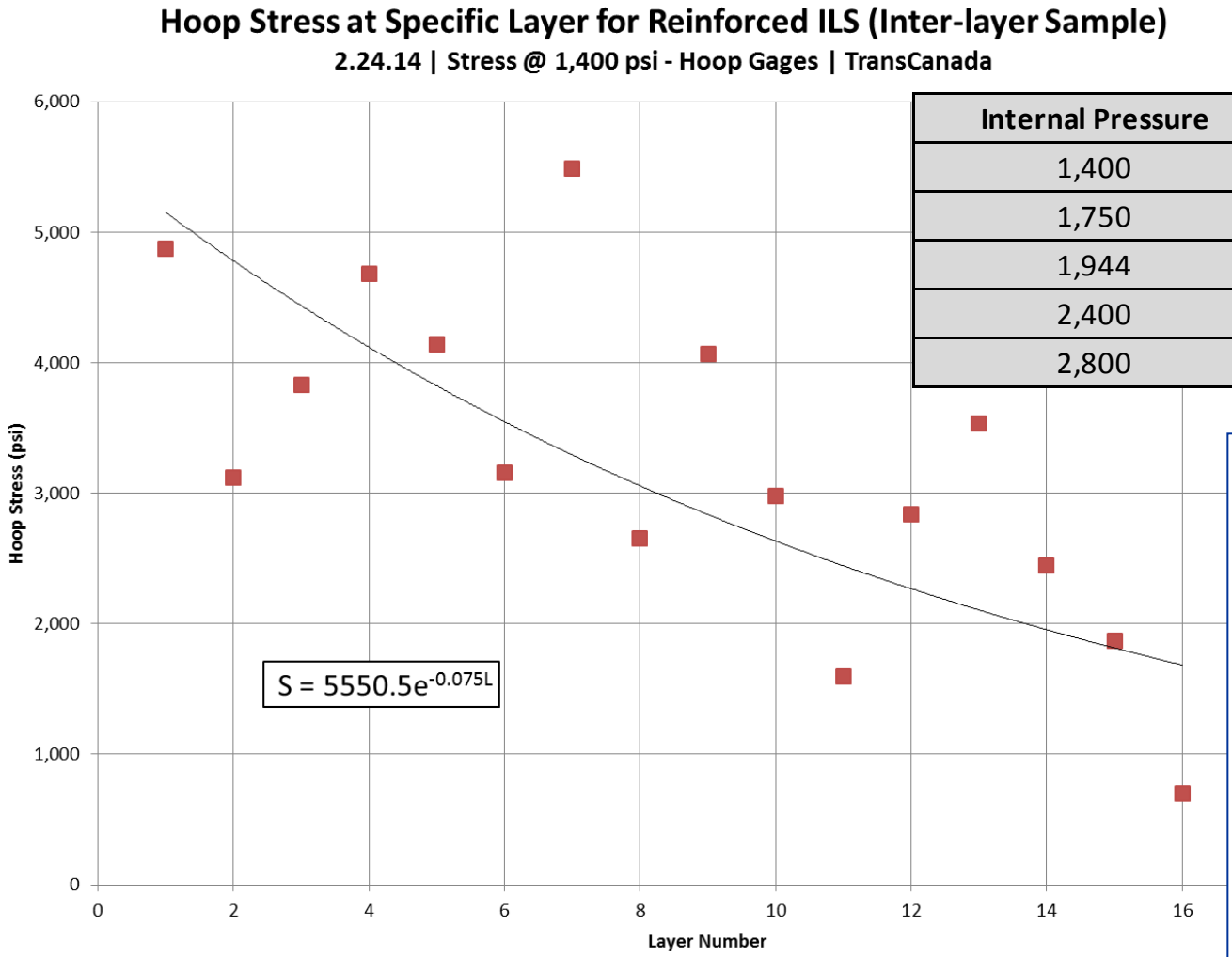

Internal Pressure	Unreinforced	Reinforced
1,400	1,077	1,110
1,750	1,796	1,245
1,944	1,991	1,380
2,400	2,457	1,872
2,800	15,922	2,343

The APPW ZED system has an average tensile strength of 68.6 ksi (70° F). <u>The minimum safety factor based on the measured inter-layer strain results is 12.5.</u>

The safety factor is critically important to ensure long-term composite performance.

TransCanada

Inter-layer Strain (4/4)

- The inter-layer strain (ILS) test was designed to measure strains within composite layers
- Composite stress calculated as product of measured strain and composite elastic modulus
- Burst pressures:
  - Unreinforced: 2,966 psi (20,450 kPa)
  - Reinforced: 3,623 psi (24,980 kPa) | end cap failure
- Maximum composite stress of 5,486 psi (37.8 MPa) measured, design strength of 11,918 psi (82.2 MPa) (*)

* The design strength for Armor Plate Pipe® Wrap is based on 1,000-hour long-term testing completed as part of the ASME PCC-2 certification. The includes a safety factor of at least 2.0 on the long-term strength for the composite material.

TransCanada

Bending Test Setup

- Included the following bend orientations in testing:
  - Bend opening
  - Bend closing
- Reinforced versus unreinforced conditions
- Bend and burst testing:
  - Reinforced
  - Unreinforced

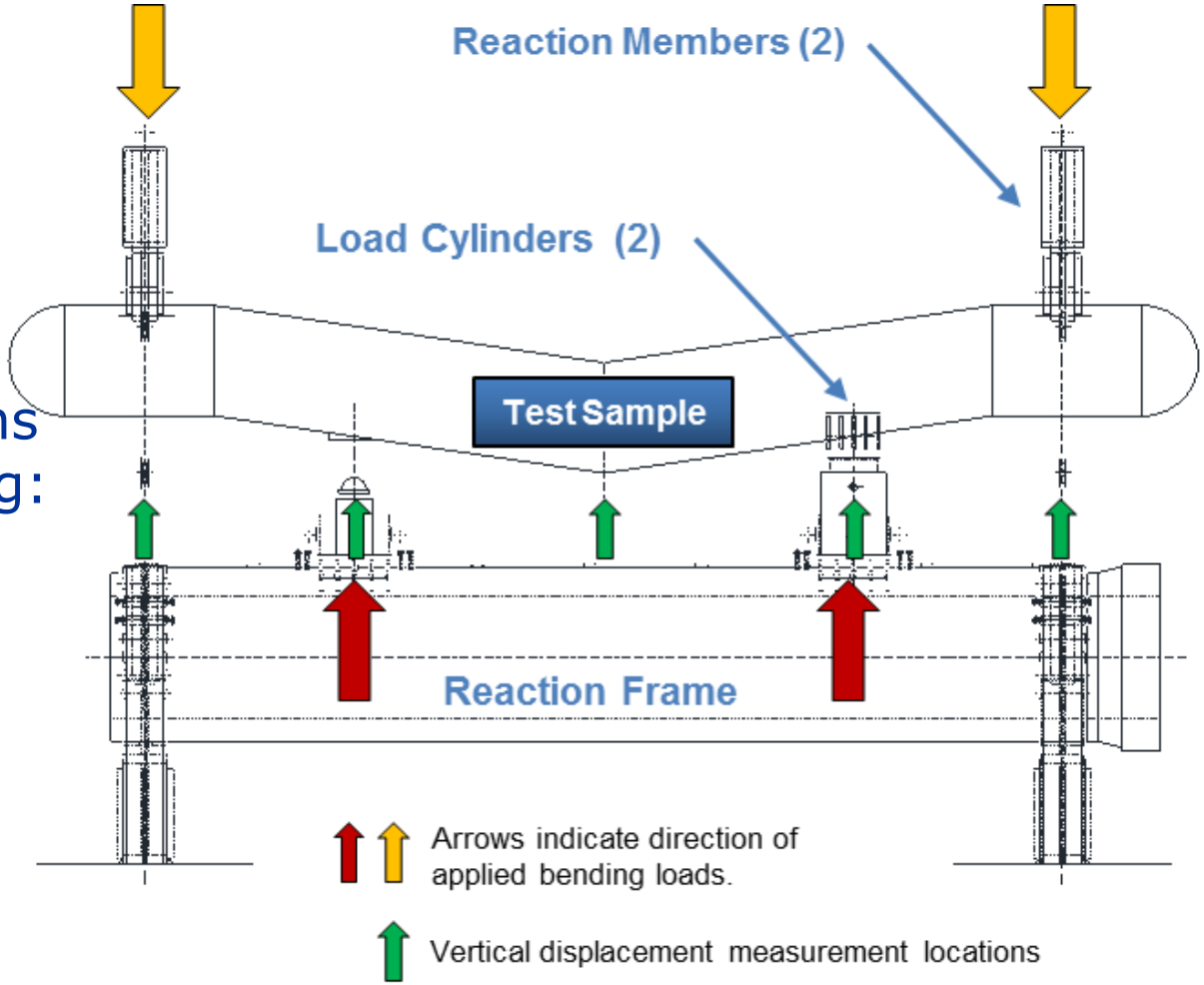

TransCanada

Bending Tests and Burst Testing

- Initial 100% SMYS hydrotest to 1,790 psi (12,342 kPa)
- Perform bend testing (3 cycles at each)
  - OPEN: 1.8 million ft-lbs (design condition)
  - CLOSED: 1.8 million ft-lbs (3.6 million with composite)
- Composite material installed at 1,038 psi (7,157 kPa)
- After bending testing completed, performed pressure testing:
  - 4-hour 100% SMYS hydrotest to 1,790 psi (12,342 kPa)
  - Applied 10 cycles at ΔP=720 - 1,440 psi (4,964 – 9,928 kPa)
  - Performed burst test
- Burst test also performed on unreinforced elbow

TransCanada

Burst Testing

Conducted after bend testing completed.

Reinforced Test Sample
Failure in 0.75-inch base pipe at 4,000 psi (27,579 kPa)

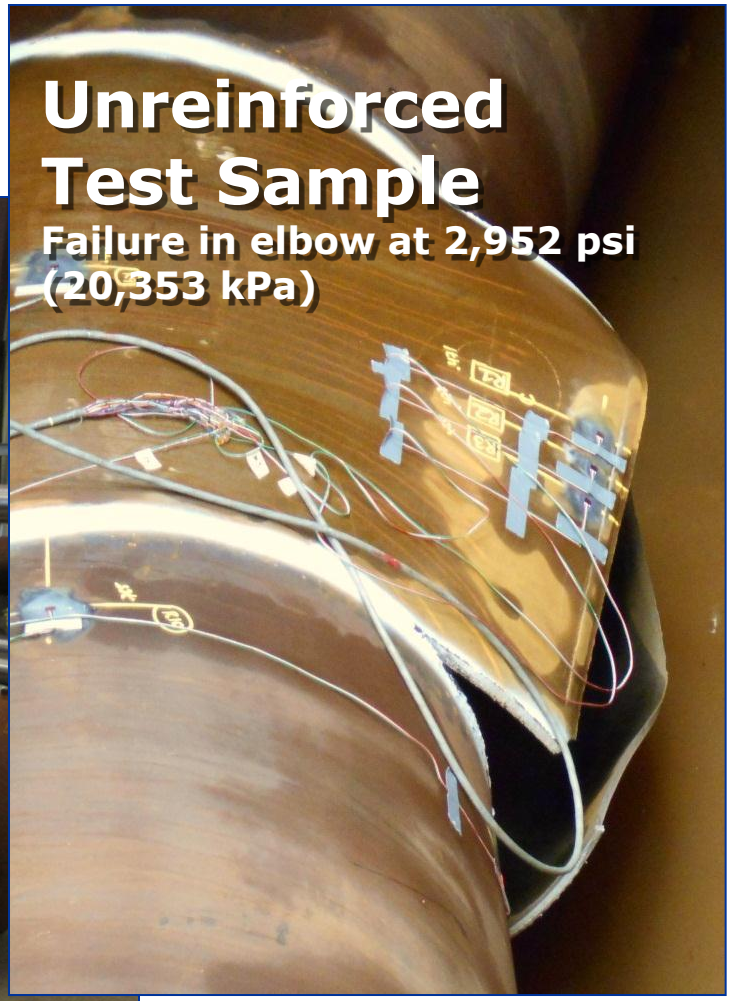

Unreinforced Test Sample
Failure in elbow at 2,952 psi (20,353 kPa)

TransCanada

Closing Comments (1/2)

- Composite materials identified as a reinforcing option for large diameter 3D fittings subjected to thermal expansion and pressure loading.
- FEA models used to optimize composite reinforcement (thickness and fiber orientation).
- Full scale testing used to validate composite performance considering a variety of loading conditions and showed that the pressure at which yielding occurs increased by 616 psi (4,247 kPa) over an unreinforced fitting.
- The composite reinforcement is effective at lowering the von Mises stresses to ensure that yielding does not occur at design conditions.

TransCanada

Closing Comments (2/2)

- The detailed finite element modeling work, including validation of both global and local models:
  - Calculated stresses less than designated allowable stresses
  - Composite materials functioned as intended
- Analysis for the operating load case (Gravity+Pressure+Temperature) helps support a conclusion that the reinforced fittings are fit for purpose.